635nm 5mW SM Fiber Coupled LD with single mode fiber
635nm SM Coaxial Pigtail diode laser
WSLP-635-005m-4-PD Wavespectrum laser inc. www.wavespectrum-laser.com

PARAMETER	SYMBOL	VALUE	UNIT
Reverse Voltage	V_r	2.0	V
Operating Temperature	T_{op}	-10~+50	℃
Storage Temperature	T_{stg}	-40 ~ +85	℃
Lead soldering temperature (10 sec.)	T_{ls}	260	℃

Features:

- 635nm
- SM Fiber
- Coaxial package
- Built-in PD

Applications:

- Medical laser treatment
- Printing

Specifications	WSLP-635-005m-4-PD		
	Min	Type	Max
Center Wavelength@25℃	630nm	639nm	645nm
Spectral Width (FWHM)	----	2.0nm	----
Output Power	----	>5mw	----
Fiber Core	4um		
Slope Efficiency	0.5mW/mA	0.8mW/mA	----
Monitor Current	0.1mA	0.2mA	1.0mA
PD Reverse Voltage	----	30V	----
Fiber Connector	FC/ST/SMA905		
Fiber Length	----	80cm	100cm
Threshold Current (Typ.)	----	50mA	55mA
Operating Current (Typ.)	----	70mA	85mA
Operating Voltage	----	2.3V	2.4V
Package Style	Coaxial		

M SQUARE
株式会社 エムスクエア https://www.mxmco.com info@mxmco.com
〒101-0051 東京都千代田区神田神保町1-34-2F TEL(03)3294-0560 FAX(03)6856-4866
〒815-0041 福岡市南区野間1-10-18 TEL(092)554-6800 FAX(092)554-6802

Coaxial Package View

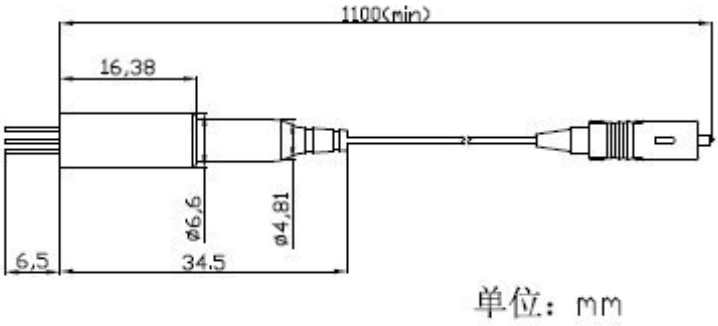

PIN Bottom View:

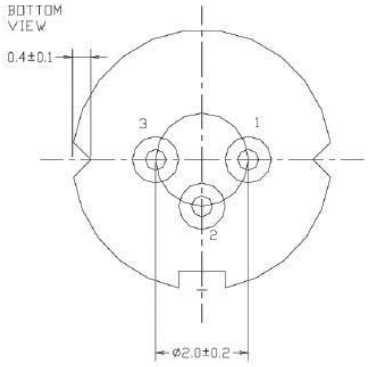

1	LD(-)
2	LD(+)&PD(-)
3	PD(+)

Electrically shorten LD module and store in non-extreme conditions.
Suggest using the constant current power supply.

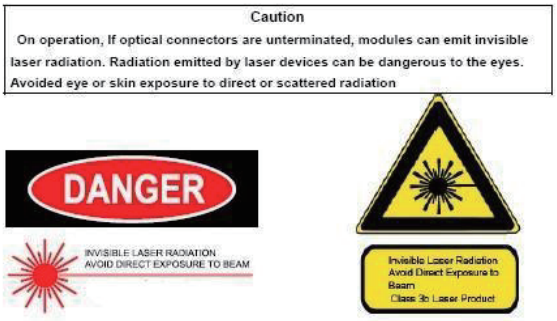

株式会社 エムスクエア https://www.mxmco.com info@mxmco.com
〒101-0051 東京都千代田区神田神保町1-34-2F TEL(03)3294-0560 FAX(03)6856-4866
〒815-0041 福岡市南区野間1-10-18 TEL(092)554-6800 FAX(092)554-6802